Measurement of Spatial Coherence of the Light Influenced by Turbulence

Hiroshi Okayama and Li-Zhong Wang

Center for Environmental Remote Sensing, Chiba University
1-33 Yayoi cho, Inage-ku Chiba 2638522 Japan

ABSTRACT

For right evaluation of the earth surface by a sensor on the satellite, it is important to correct the atmosphere and atmospheric turbulence is one of the correction factors.

The spatial coherence of the light influenced by the turbulence was measured by use of a simulator equipped with a multiple reflection system in the laboratory. The turbulence was generated by changing the ambient temperatures from 32° C to 48° C. It has been found that in measurement results the spatial coherence of the light which has passed through the turbulent region decreases with the increase of the temperature. The analysis of interference fringes caused by double slits was made by use of the photographic method.
The visibility of the interference fringes depends on the degree of turbulence, and the dependency is theoretically described.

1. Introduction

Atmospheric turbulence artificially generated in a remote sensing simulator is used for experiment.
When the earth's surface is exactly estimated by remote sensing, the satellite data must be corrected for the turbulence of atmosphere although an adequate correction method has not been found yet. In this paper the resulted of an optical measurement of turbulence is described. Regarding turbulence there are many theoretical papers, but few papers have reported on the experiments on degradation of spatial coherence. The degradation of coherence by turbulence was reported by Ho [1] and Andrews [2].

We visualize the problem physically as follows. A beam of a monochromatic wave is emanating from the plane Z = 0, its irradiance profile being Gaussian. We assume that the minimum scale of the turbulence is much larger than the wave length of the beam. We specify the coherence function in the plane z = 0, and try to find the coherence function in the plane Z = L. The turbulence is measured by use of a double slits. The degradation of coherence is estimated by the measurement of spatial coherence.

2. Turbulence and coherence

Because the average irradiance of a Gaussian beam varies in the plane Z = L, it is more meaningful to describe the coherence degradation in a random medium by the degree of coherence than by the mutual coherence function itself. The degree of coherence is defined as

$$\gamma(x_1,x_2) = \left\{\hat{\Gamma}(x_1, x_2)\right\} \Big/ \left[\left\{\hat{I}(x_1)\right\}\left\{\hat{I}(x_2)\right\}\right]^{\frac{1}{2}}, \qquad (1)$$

where $\hat{\Gamma}(x_1, x_2)$ is a mutual coherence function and $\hat{I}(x)$ is average irradiance. The mutual coherence function is represented as follows :

$$\left\{\hat{\Gamma}(x_1,x_2)\right\}_L = \left\{\hat{V}(x_1)\hat{V}^*(x_2)\right\}_{Z_1=Z_2=L} , \tag{2}$$

where $\hat{V}(x)$ shows a scaler wave field.

$$\left\{\hat{\Gamma}\right\}_L = \left\{\hat{\Gamma}_0\right\}_L \left(1-\frac{1}{2}\pi k^2 \int_0^L dp \int_0^\infty d\eta\, \eta\tilde{\phi}(\eta)\right) \times \left\{1 - J_0\left[\beta_r(p)\eta r_{12}\right] \times \exp\left[-\eta^2(L-p)^2/k^2a^2|B(L)|^2\right]\right\}\Bigg), \tag{3}$$

and

$$\left\{\hat{I}\right\}_L = \left\{\hat{I}_0\right\}\Bigg(1-\frac{1}{2}\pi k^2 \int_0^L dp \int_0^\infty d\eta\,\eta\tilde{\phi}(\eta) \times \left\{1-I_0\left[2\beta_i(p)\eta r\right] \times \exp\left[-\eta^2(L-p)^2/k^2a^2|B(L)|^2\right]\right\}\Bigg) , \tag{4}$$

where $x_1 = -x_2$, $y_1 = -y_2$ and $z_1 = z_2 = L$. J_o is Bessel function, and r_{12} is the distance between the two observation points. a is effective radius of Gaussian beam. L is the propagation length.

$$\tilde{\beta}_r(p) = 1 + \left[\frac{\left(1-L/r_c\right)}{|B(L)|^2} - 1\right] p , \tag{5}$$

$$\tilde{\beta}_i(p) = -\left[L/ka^2|B(L)|^2\right] p , \tag{6}$$

$$|B(L)|^2 = \left(1-L/r_c\right)^2 + L^2/k^2a^4 , \tag{7}$$

$$\gamma(r_{12},L) \approx \exp\Bigg(-\frac{1}{2}\pi k^2 \int_0^L dp \int_0^\infty d\eta\,\eta\tilde{\phi}(\eta) \times \left\{-J_0\left[\beta_r(p)\eta r_{12}\right] + I_0\left[\beta_i(p)\eta r_{12}\right]\right\} \times \exp\left[-\eta^2(L-p)^2/k^2a^2|B(L)|^2\right]\Bigg) , \tag{8}$$

where $r_{12} = 2r$. For turbulent atmosphere

$$\left\{\tilde{\Gamma}\right\}_L \approx \left\{\tilde{\Gamma}_0\right\}_L \exp\Big[-4.35 C_n^2 k^2 L \eta_m^{-\frac{5}{3}} \times F\left(r_{12}\eta_m ; \frac{L\eta_m^2}{k}, \frac{L}{ka^2}, \frac{L}{r_c}\right)\Big] , \tag{9}$$

where η is of the order of $1/l_m$ and C_n is the structure constant of the refractive index.

$$\left\{\hat{I}\right\}_L \approx \left\{\hat{I}_0\right\}_L \exp\Big\{ -4.35 C_n^2 k^2 L \eta_m^{-\frac{5}{3}} \times H\left[r/a|B(L)|;\theta\right]\Big\} , \tag{10}$$

$$\therefore\ \gamma\left(r_{12}, L\right) \approx \exp\Big[-4.35 C_n^2 k^2 L \eta_m^{-\frac{5}{3}} \times Q\left(r_{12}\eta_m ; \frac{L\eta_m^2}{k}, \frac{L}{ka^2}, \frac{L}{r_c}\right)\Big] , \tag{11}$$

where

$$Q\left(r_{12}\eta_m ; \frac{L\eta_m^2}{k}, \frac{L}{ka^2}, \frac{L}{r_c}\right) = \int_0^1 dp\left(1+\theta^2 p^2\right)^{\frac{5}{6}} \times \Big\{ {}_1F_1\left[-\frac{5}{6}, 1, -\frac{1}{4}\beta_r^2(p) r_{12}^2 \eta_m^2 / \left(1+\theta^2 p^2\right)\right] - {}_1F_1\left[-\frac{5}{6}, 1, \frac{1}{4}\tilde{\beta}_i^2(p) r_{12}^2 \eta_m^2 / \left(1+\theta^2 p^2\right)\right]\Big\} , \tag{12}$$

where

$$\theta^2 = L^2 \eta_m^2 \Big/ k^2 a^2 |B(L)|^2 , \tag{13}$$

${}_1F_1$ is the confluent hypergeometric function.

The solution for a collimated beam can be obtained by setting $L/r_c = 0$, where r_c is radius of wave-front curvature. Let us first consider two limiting cases, the case of a spherical wave, where $L/ka^2 \to \infty$.

When $L/ka^2 \to 0$, we have

$$\gamma\left(r_{12},L\right)=\exp\Big(\ -4.35C_n^{\,2}k^{\,2}L\,\eta_m^{\,-\frac{5}{3}}$$

$$\times\left\{{}_1F_1\left[-\frac{5}{6},1,-\frac{1}{4}r_{12}\,\eta_m^{\,2}\right]-1\right\}\Big)\ . \tag{14}$$

For $1/4\cdot r_{12}^{\,2}\ \eta_m^{\,2}>>1$ we get

$$\gamma\left(r_{12},L\right)\approx\exp(\ -1.455C_n^{\,2}k^{\,2}L\,r_{12}^{\frac{5}{3}}\ )\ . \tag{15}$$

When $L/k\,a^2\rightarrow\infty$, we have

$$\gamma\left(r_{12},L\right)=\exp\Big(\ -4.35C_n^{\,2}k^{\,2}L\,\eta_m^{\,-\frac{5}{3}}\int_0^1 dp$$

$$\times\left\{{}_1F_1\left[-\frac{5}{6},1,-\frac{1}{4}(1-p)^2r_{12}^{\,2}\ \eta_m^{\,2}\right]-1\right\}\Big)\ . \tag{16}$$

For $1/4\cdot r_{12}^{\,2}\ \eta_m^{\,2}>>1$ we get

$$\gamma\left(r_{12},L\right)\approx\exp\left(-0.546C_n^{\,2}k^{\,2}L\,r_{12}^{\frac{5}{3}}\right)\ . \tag{17}$$

When $L/k\,a^2<<1$, $L^2\,\eta_m^{\,2}/k^2\,a^2<<1$, and $1/4\cdot r_{12}^{\,2}\ \eta_m^{\,2}>>1$,

$$\gamma\left(r_{12},L\right)\approx\exp\left[-1.455C_n^{\,2}k^{\,2}Lr_{12}^{\frac{5}{3}}\left(1-\frac{5}{6}L^2/k^2a^4\right)\right], \tag{18}$$

which shows that a collimated beam has a higher degree of coherence than an infinite plane wave.

In order to see how the degree of coherence changes as the value of $L/k\,a^2$ varies from 0 to ∞, the integral Q is evaluated numerically for $L/r_c=0$ and a prescribed $L\,\eta_m^{\,2}/k$. The results are shown in Fig. 1.

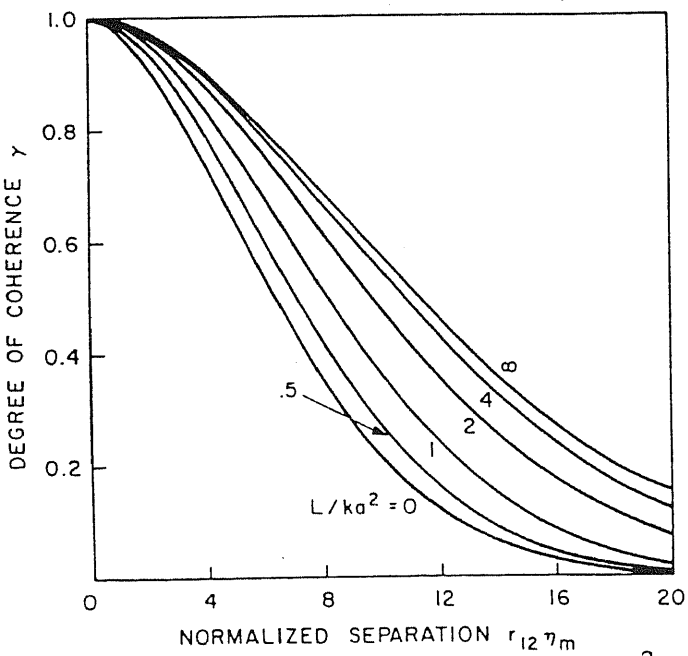

Fig. 1. Degree of coherence of a collimated gaussian beam, for $L/k\,1\,m^2=1$, $C_m^{\,2}\,k^2\,L\,\eta_m^{\,-5/3}=0.025$ where $\eta_m=5.91/1\,m$.

3. Experimental apparatus

A chamber (240 cm × 75 cm × 30 cm) was made to simulate the atmosphere. To measure the turbulence optically, a long optical pass was insured by multiple reflection in the chamber. The optical system of the chamber is shown in Fig. 2. There are four heat sources of nichrome line in the chamber. To send a hot wind uniformly steel and styrenes filters were used. The double slits were used to measure the spatial coherence. The slits were 25 μm wide and 50 μm apart from each other. The given interference fringes were recorded on the photographic film. The densities of the interference fringes were measured by use of a micro densitometer. The visibility of the interference fringes was calculated by use of the following equation :

$$\gamma = \frac{I_{max} - I_{min}}{I_{max} + I_{min}}, \tag{19}$$

where I_{max} and I_{min} are maximum and minimum values of the effective exposure, respectively. Here the visibility of the interference fringe represents the degree of coherence.

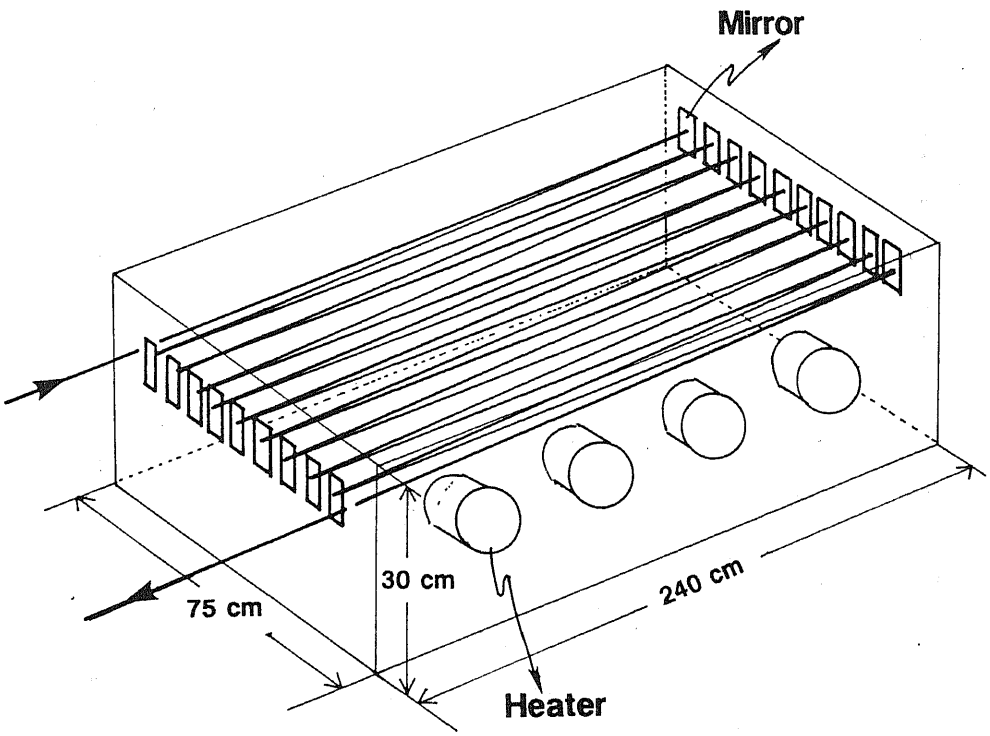

Fig. 2. A simulator of atmospheric turbulence with optical system of multiple reflection.

4. Experimental Results

The degradation of coherence by turbulence is theoretically clear from Fig. 1. The experimental results by turbulence of air are shown in Fig. 3. From Fig. 3 the coherence degree reduces with increasing temperature of air. When the temperature increases from 30° C to 40° C, the degree of coherence reduces by 0.136.

The temperature outside the chamber is 27 °C. The temperature differences between inside and outside of the chamber are shown on the horizontal in Fig. 3.

Possible causes for turbulence occurrence are the aerosol and temperature difference for the chamber, but the aerosol effect was ignored in this experiment.

5. Conclusions

For this experiment, a simulator with an optical multiple reflection system was made. The temperatures of the air were changed from 32° C to 48° C. The degradation of coherence was evaluated by measurement of the spatial coherence. In the future it would be necessary to measure turbulence in a larger temperature range. Then it might be possible to make atmospheric correction of satellite data from our experimental results.

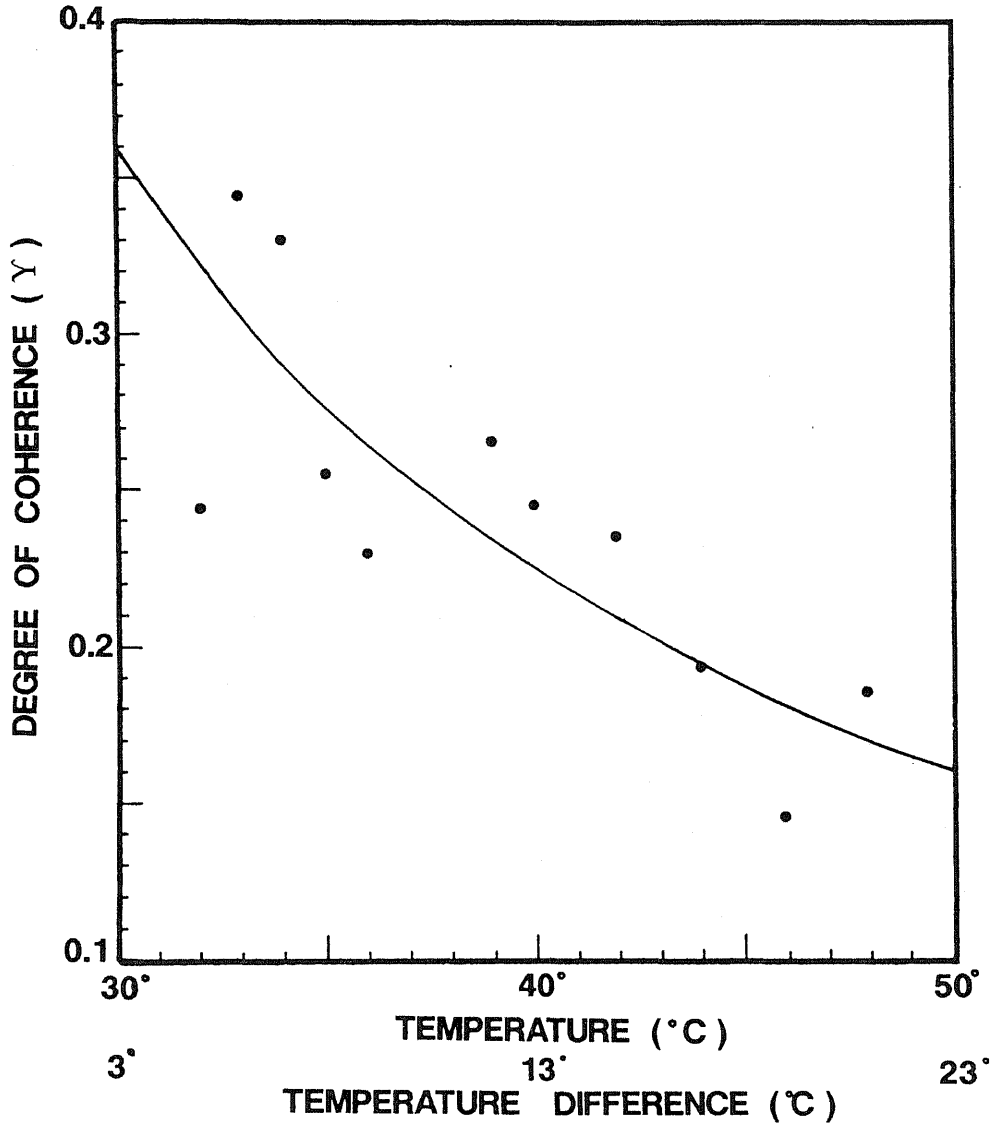

Fig. 3. Degree of coherence of turbulent air from experimental result.

References

1. T. L. Ho, "Coherence Degradation of Gaussian Beams in a Turbulent Atmosphere", Journal of The Optical Society of Am., **60**, 665 (1970).

2. L. C. Andrews, W. B. Miller and J. C. Ricklin, "Spatial coherence of a Gaussian-beam wave in weak and strong optical turbulence", Journal of The Optical Society of Am. A, **11**, 1653 (1994).