# マングローブ林林分要素の現地調査法の開発Ⅱ
## －システムの試作・改良と適用試験－

佐藤一紘

## Incentive to develop this system

1. It increases importance to comprehend area and circumstances of mangrove forest.
2. It is difficult to measure tree height and trunk volume for many trees in mangrove forest without cutting down.
3. We wish to make clear the relationships among stand parameters on mangrove forest and satellite data.

## The effects and problems of this system

1. It is not necessary to measure distance between camera and target tree.
2. Measuring time became shorter.
3. It is not necessary climbing trees as riskful work.
4. Number and weight of the equipment must be cut in future.

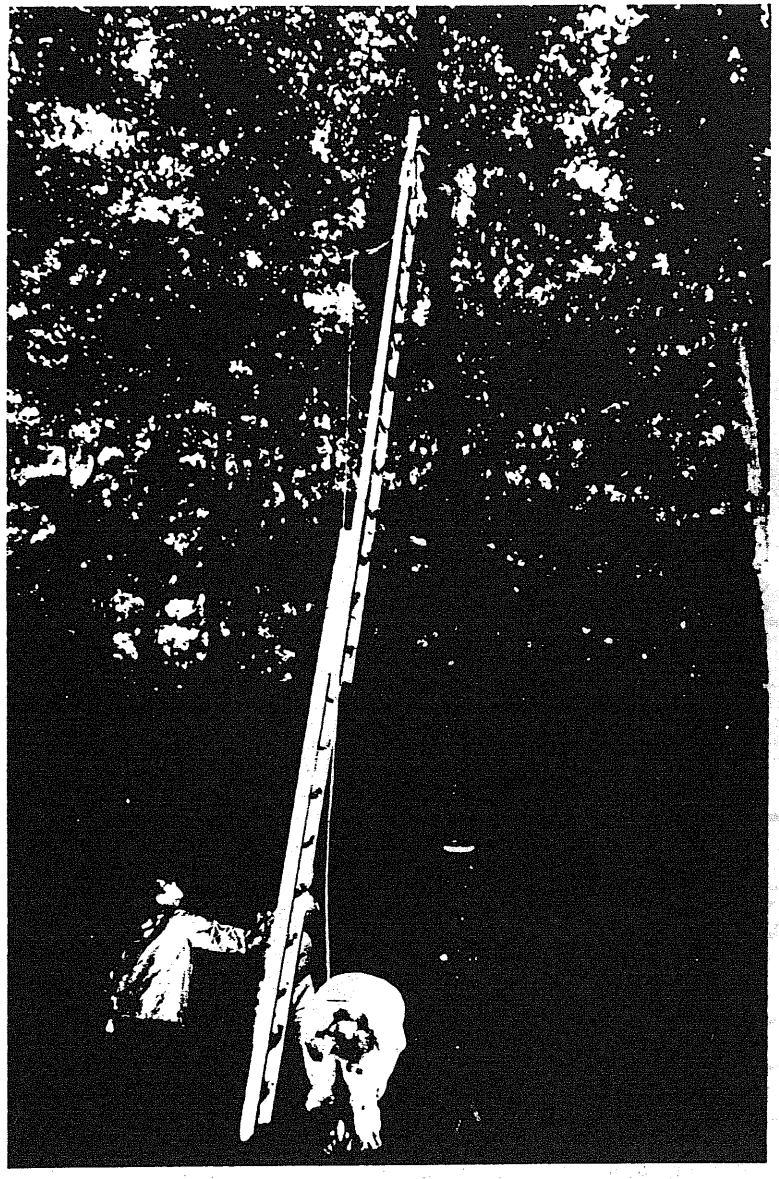

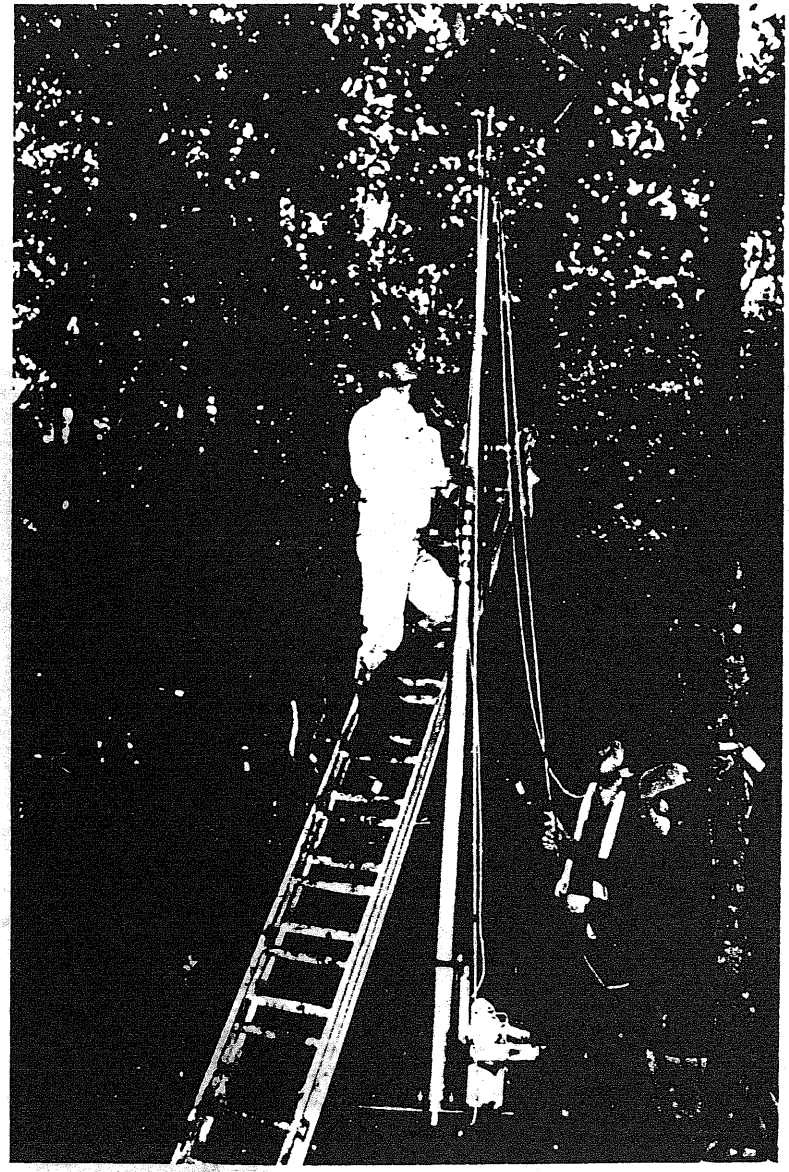

**Comparison of field survey situation between conventional ways and developed new method**

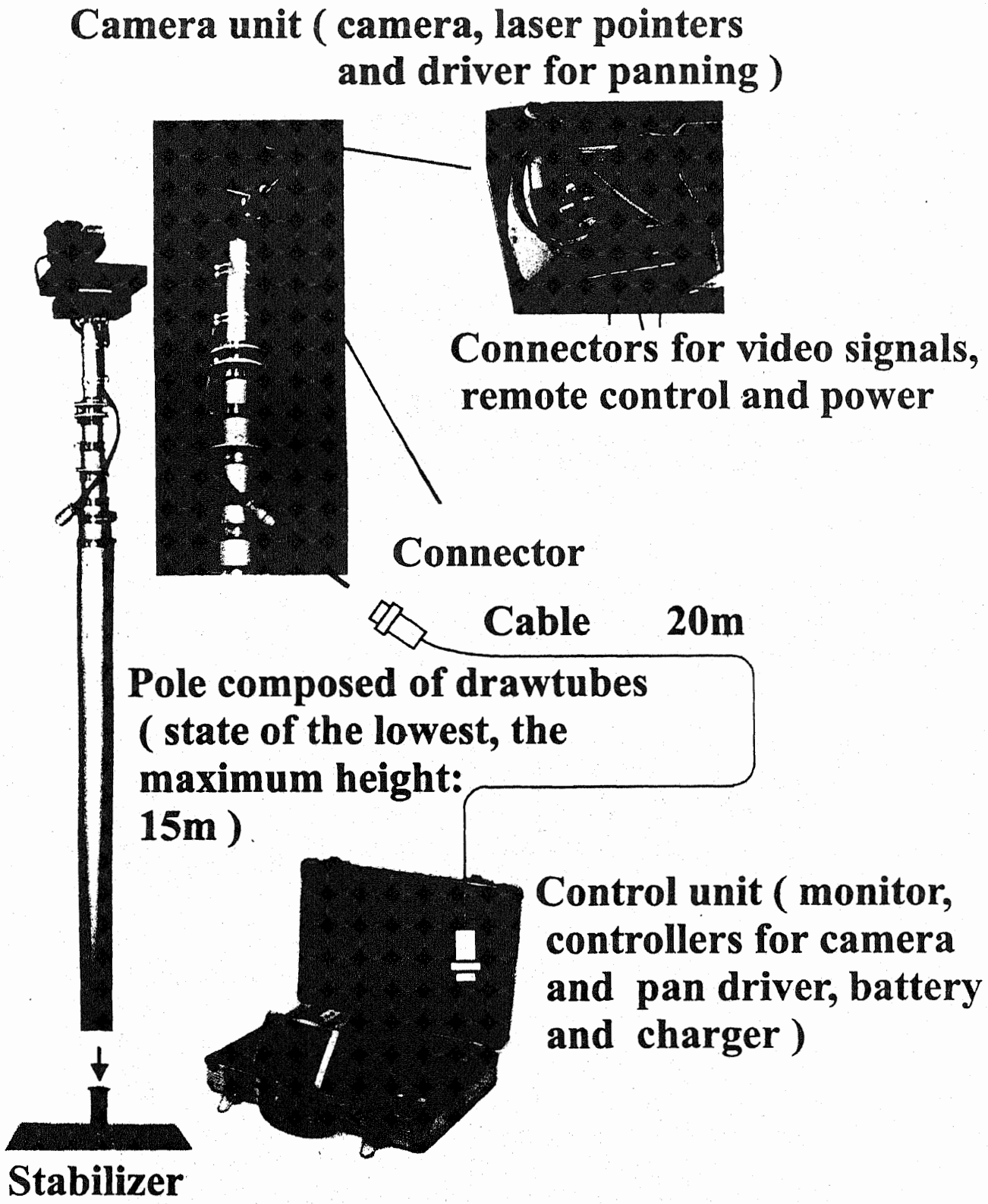


**Composition and connection on developed new method for measurement of stand parameters in mangrove forest**

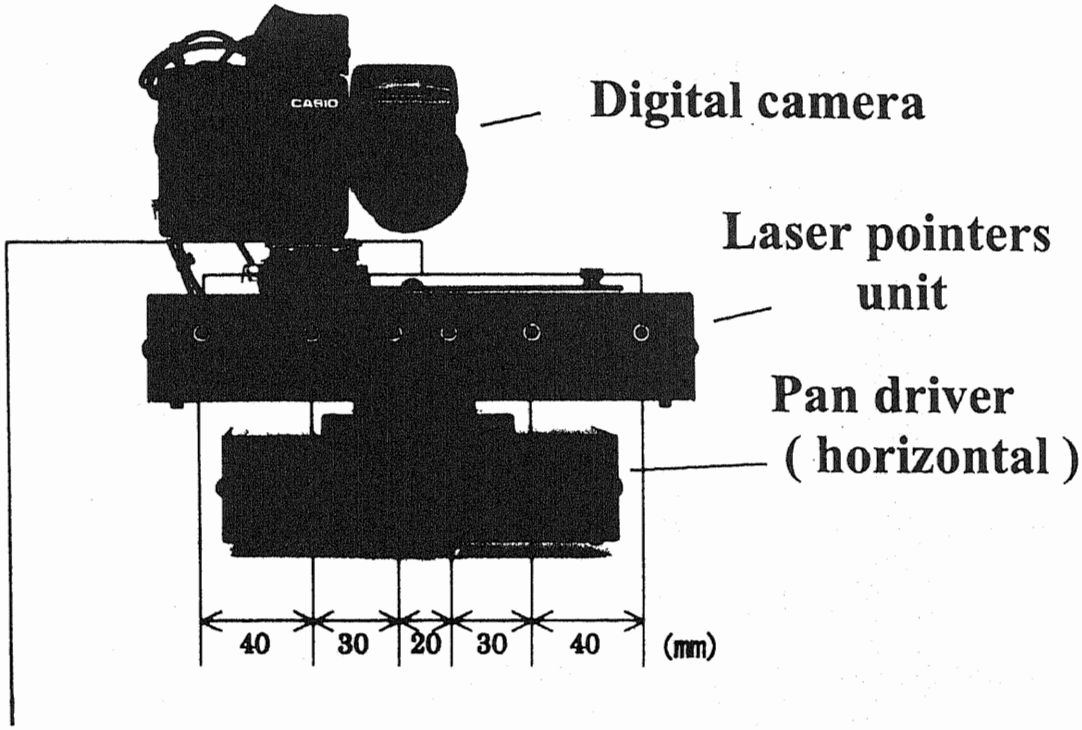


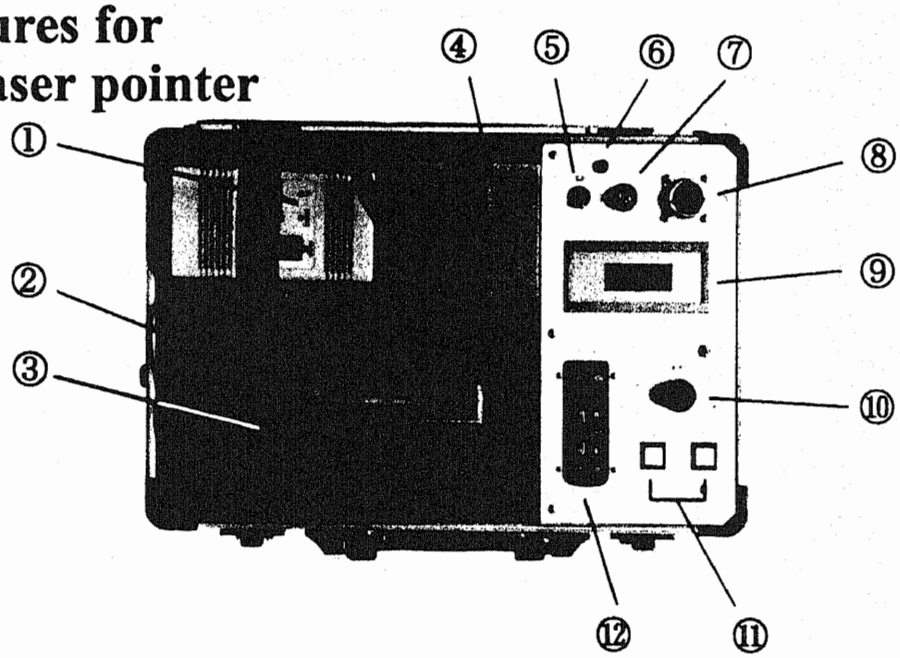


① charger
② AC code of chager
③ liqid crystal monitor
④ battery
⑤ power switch
⑥ pilot lamp
⑦ fuse holder
⑧ cable connector
⑨ voltagemeter
⑩ pan speed adjuster
⑪ buttons for pan direction change
⑫ controller for digital camera

# Details of camera unit and control unit

**Figure 7. How to measure trunk diameter**

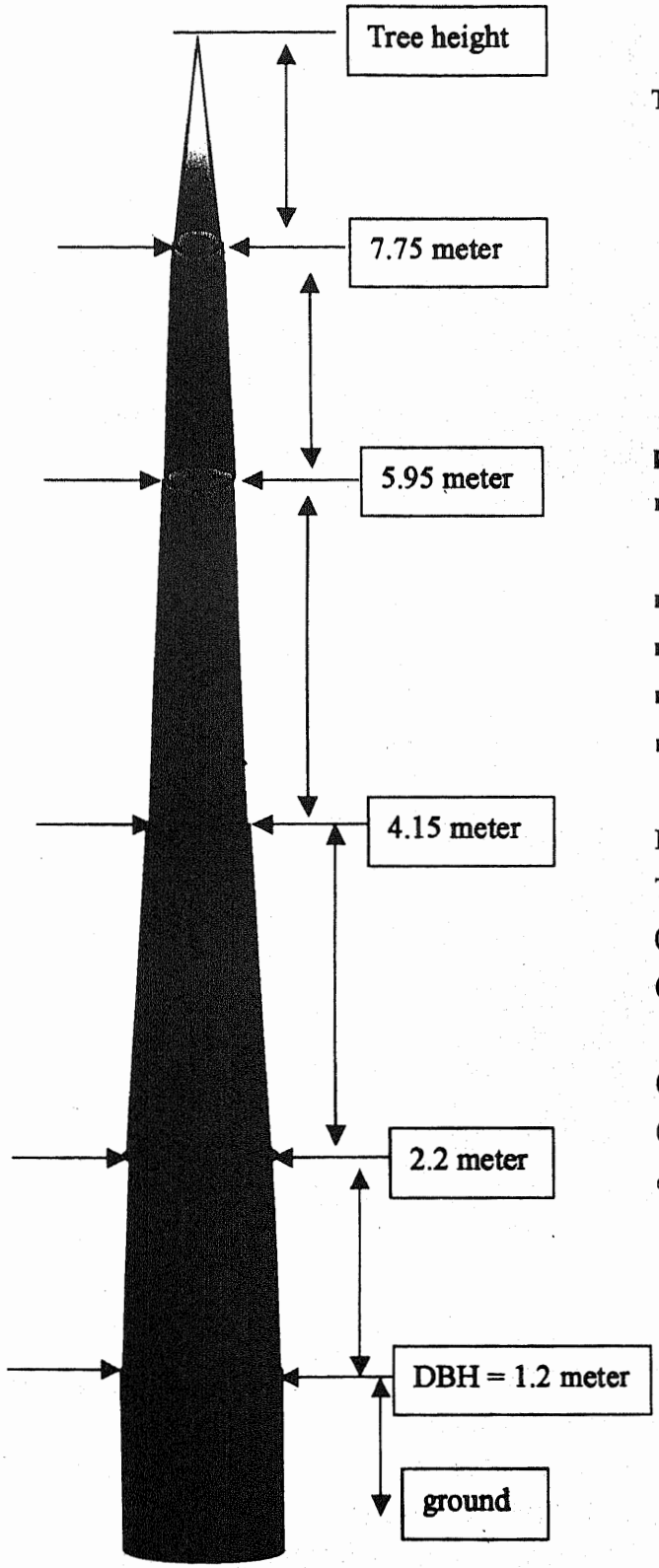


Trunk Volume = Vol (0-DBH) +
Vol (DBH-D2.20) +
Vol (D2.20-D4.15)+
Vol (D4.15-D5.95) +
Vol (D5.95-D7.75) +
Vol (7.75-(Tree Height - D7.75))

**phi**=3.1413
**r1**=radiant at Tree diameter
(DBH height=1.2meter)
**r2**=radiant at Tree diameter=2.20 meter
**r4**=radiant at Tree diameter=4.15 meter
**r5**=radiant at Tree diameter=5.95 meter
**r7**=radiant at Tree diameter=7.75 meter

**For** i= 1 **to** 27 **do**
Trunk volume (i) = (phi*r1(i)^2*1.2) +
(1/3*phi*(r1(i)^2 + r1(i)*r2(i) + r2(i)^2)/1^2) +
(1/3*phi*(r2(i)^2 + r2(i)*r4(i) + r4(i)^2)/1.95^2) +
(1/3*phi*(r4(i)^2 + r4(i)*r5(i) + r5(i)^2)/1.8^2) +
(1/3*phi*(r5(i)^2 + r5(i)*r7(i) + r7(i)^2)/1.8^2) +
(1/3*phi*r7(i)^2*(Tree height(i)-7.75))
**end;**

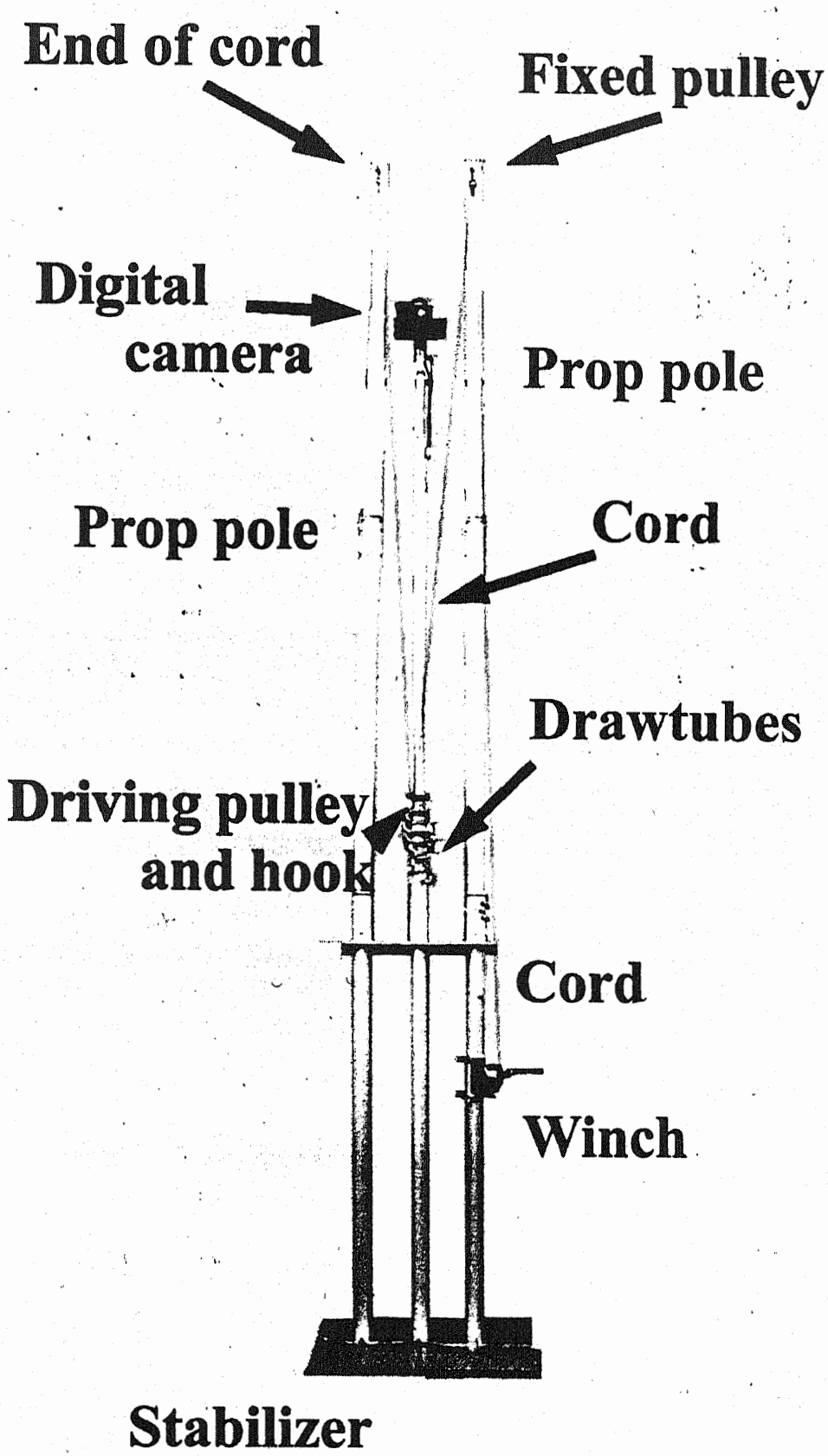


Composition of improved pole system

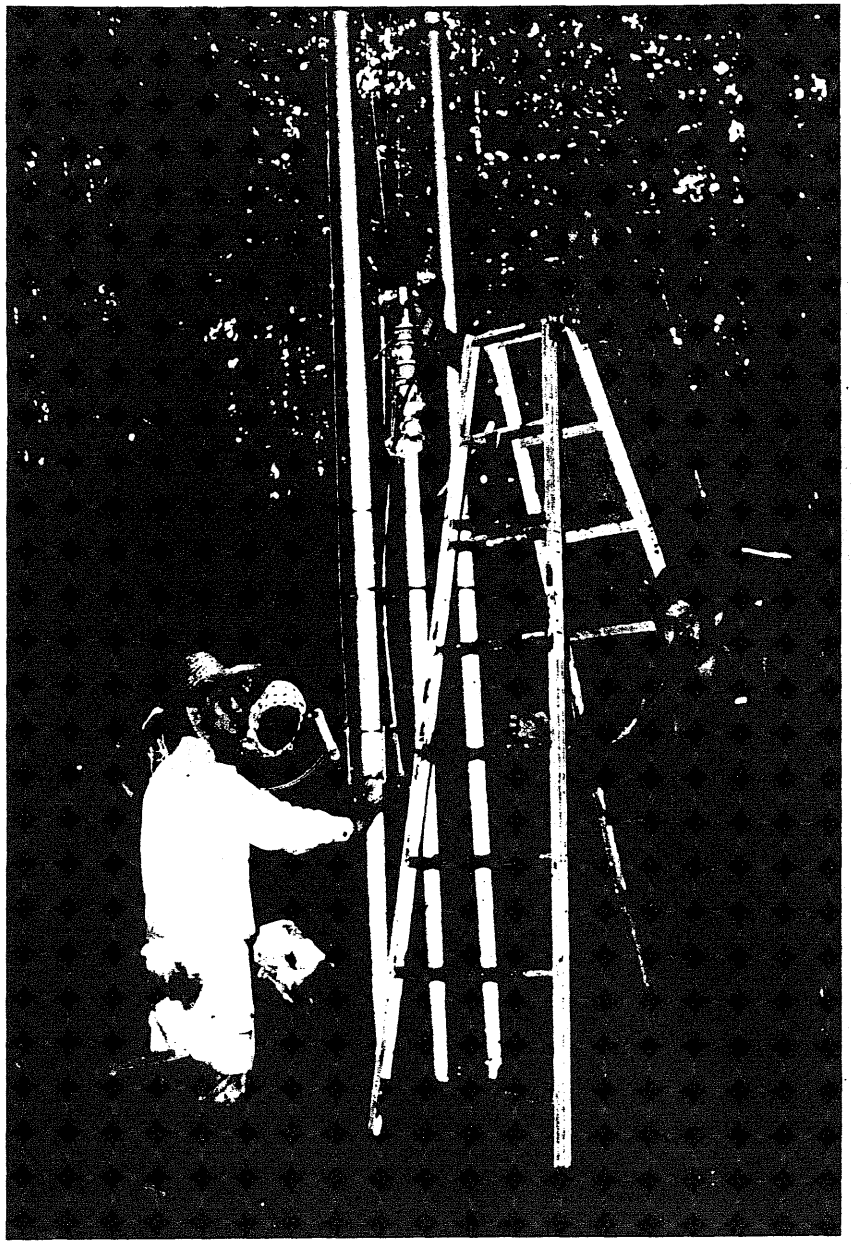

Set up of improved system

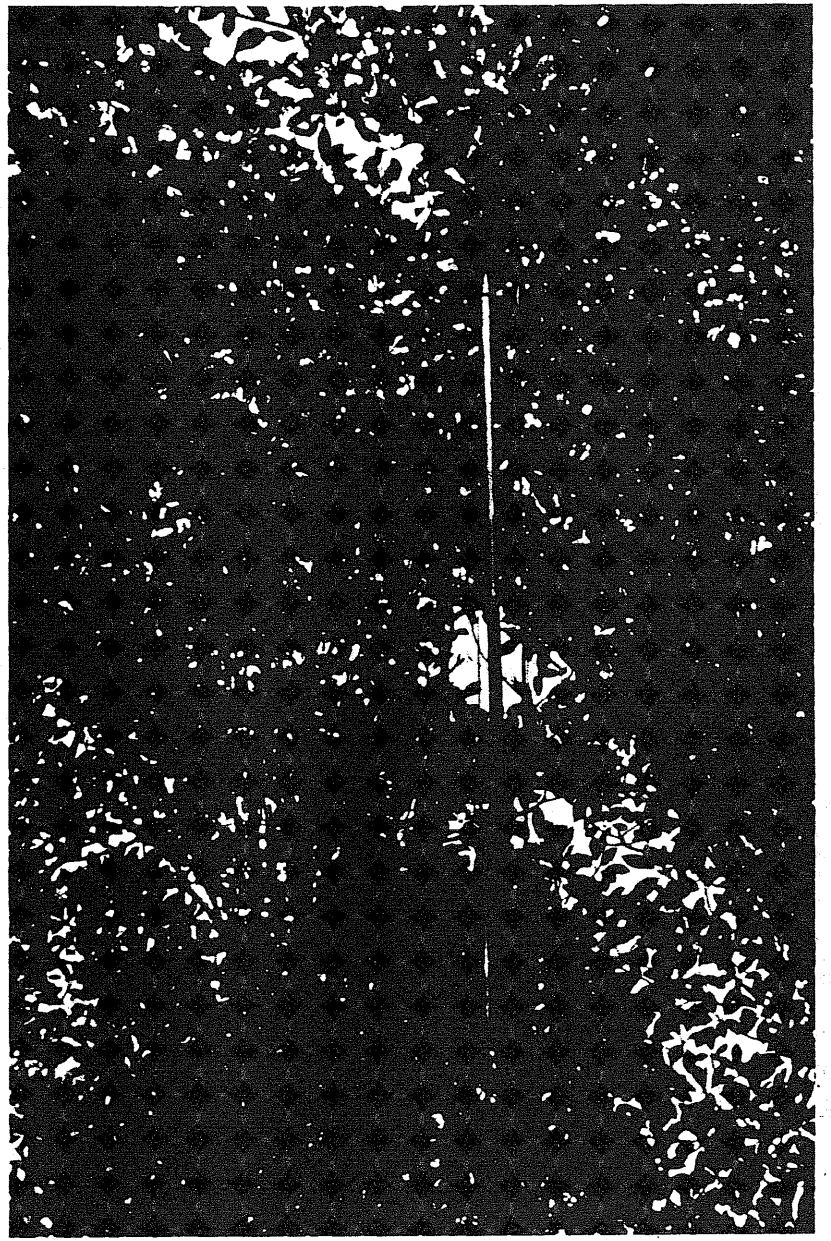

Pulled camera unit up

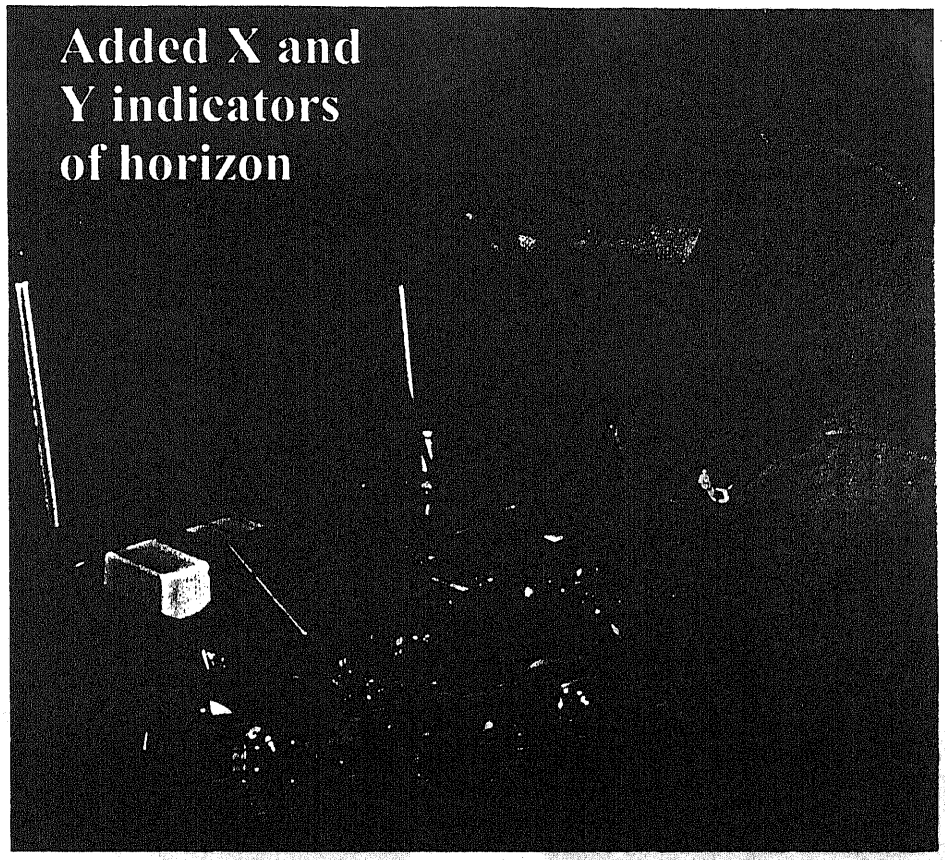


**Improved control unit**

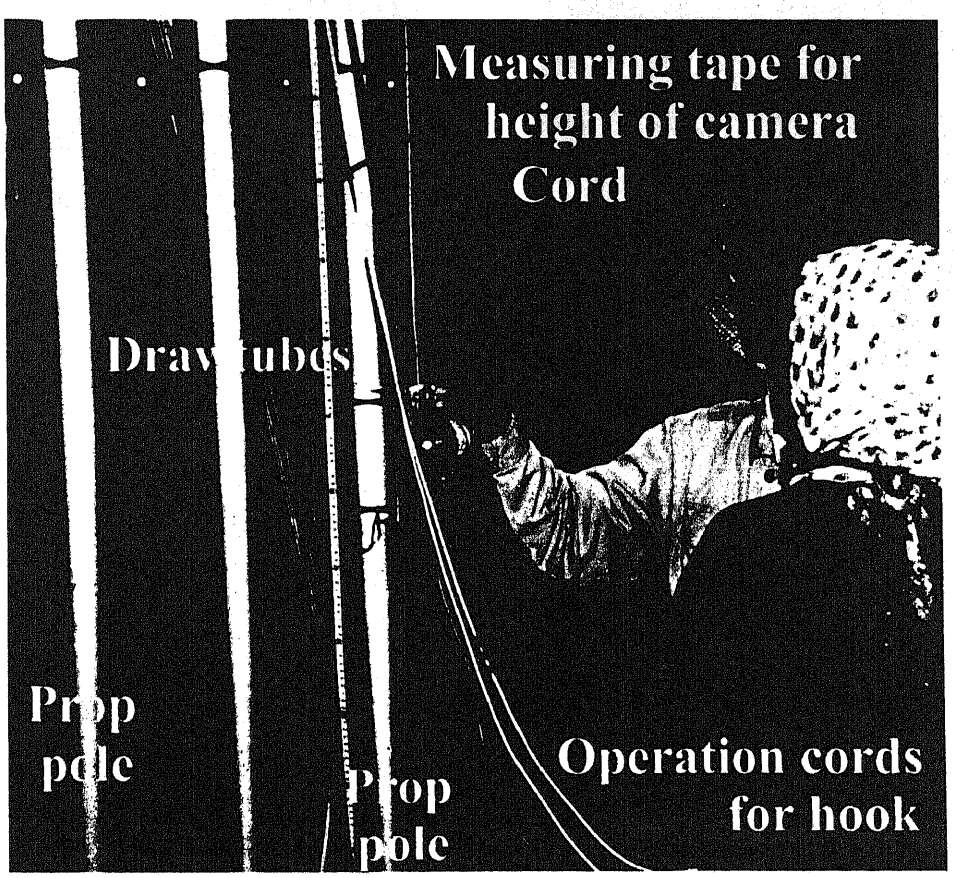


**Handling the winch for pulling a drawtube up**

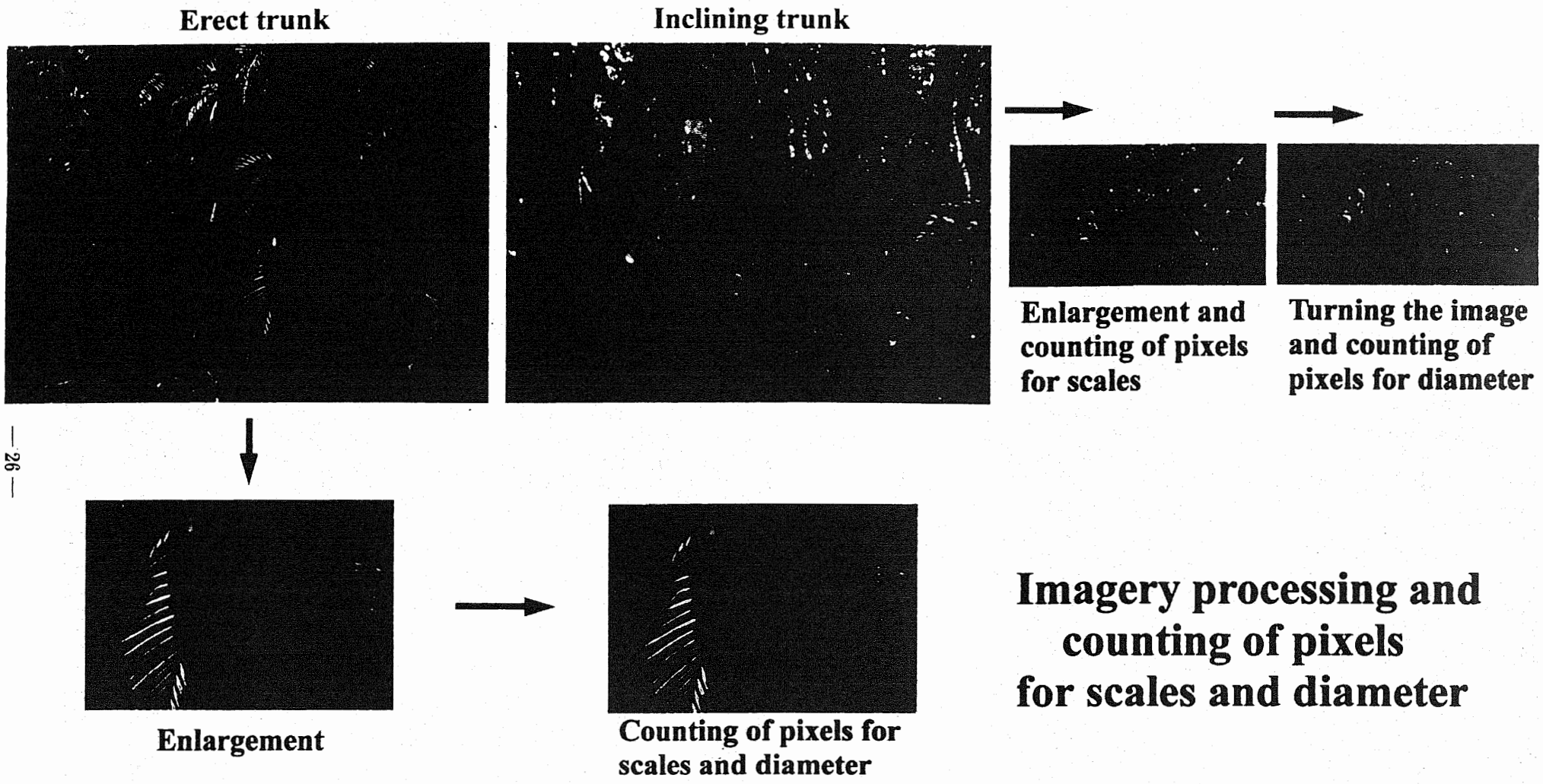


**Imagery processing and counting of pixels for scales and diameter**